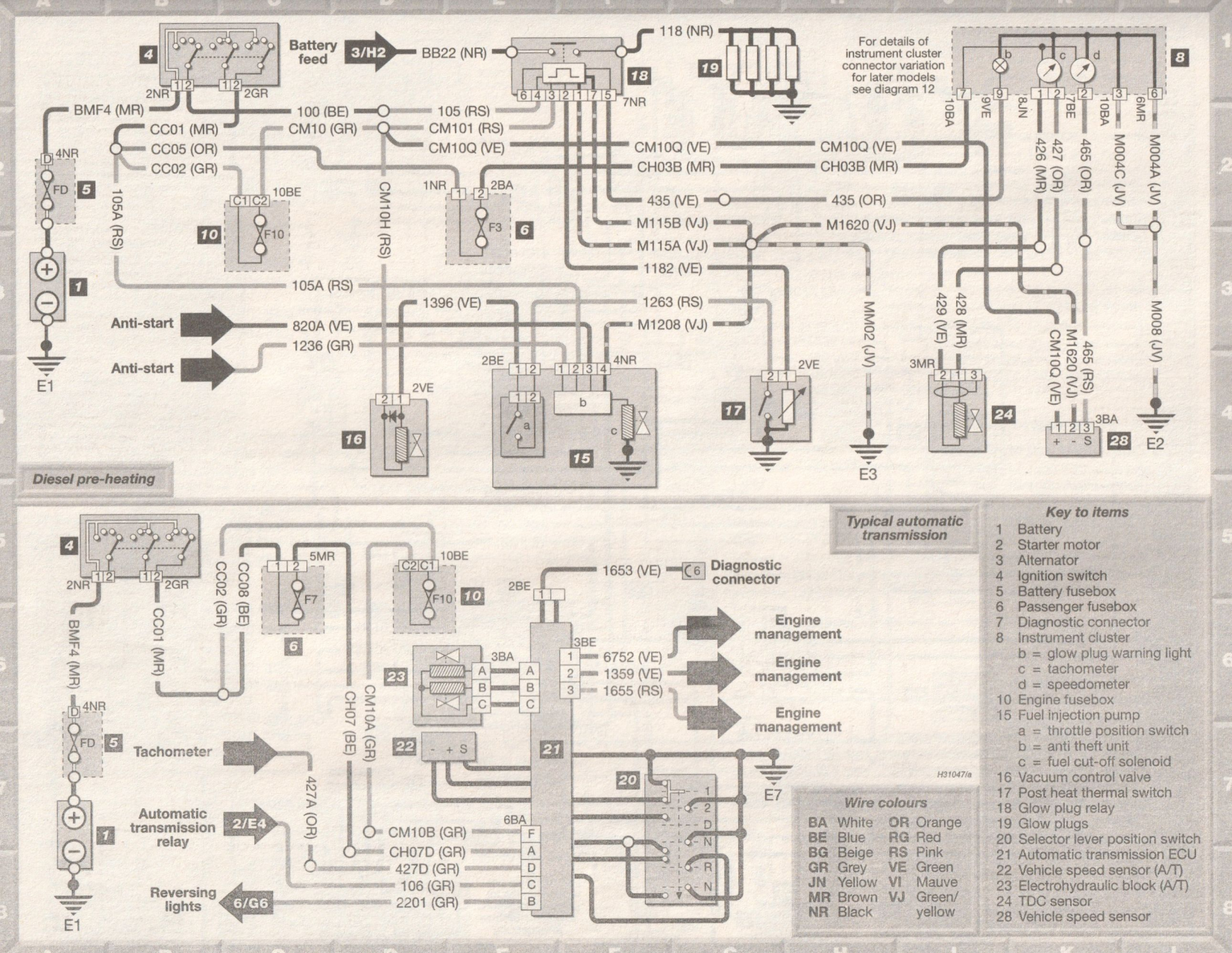

Key to items

1 Battery
2 Starter motor
3 Alternator
4 Ignition switch
5 Battery fusebox
6 Passenger fusebox
7 Diagnostic connector
8 Instrument cluster
  b = glow plug warning light
  c = tachometer
  d = speedometer
10 Engine fusebox
15 Fuel injection pump
  a = throttle position switch
  b = anti theft unit
  c = fuel cut-off solenoid
16 Vacuum control valve
17 Post heat thermal switch
18 Glow plug relay
19 Glow plugs
20 Selector lever position switch
21 Automatic transmission ECU
22 Vehicle speed sensor (A/T)
23 Electrohydraulic block (A/T)
24 TDC sensor
28 Vehicle speed sensor

Wire colours

BA	White	OR	Orange
BE	Blue	RG	Red
BG	Beige	RS	Pink
GR	Grey	VE	Green
JN	Yellow	VI	Mauve
MR	Brown	VJ	Green/ yellow
NR	Black		