vehicle : C4 PICASSO		OPR : 11238	
domain	power unit	function	electronic injection
component			

principle

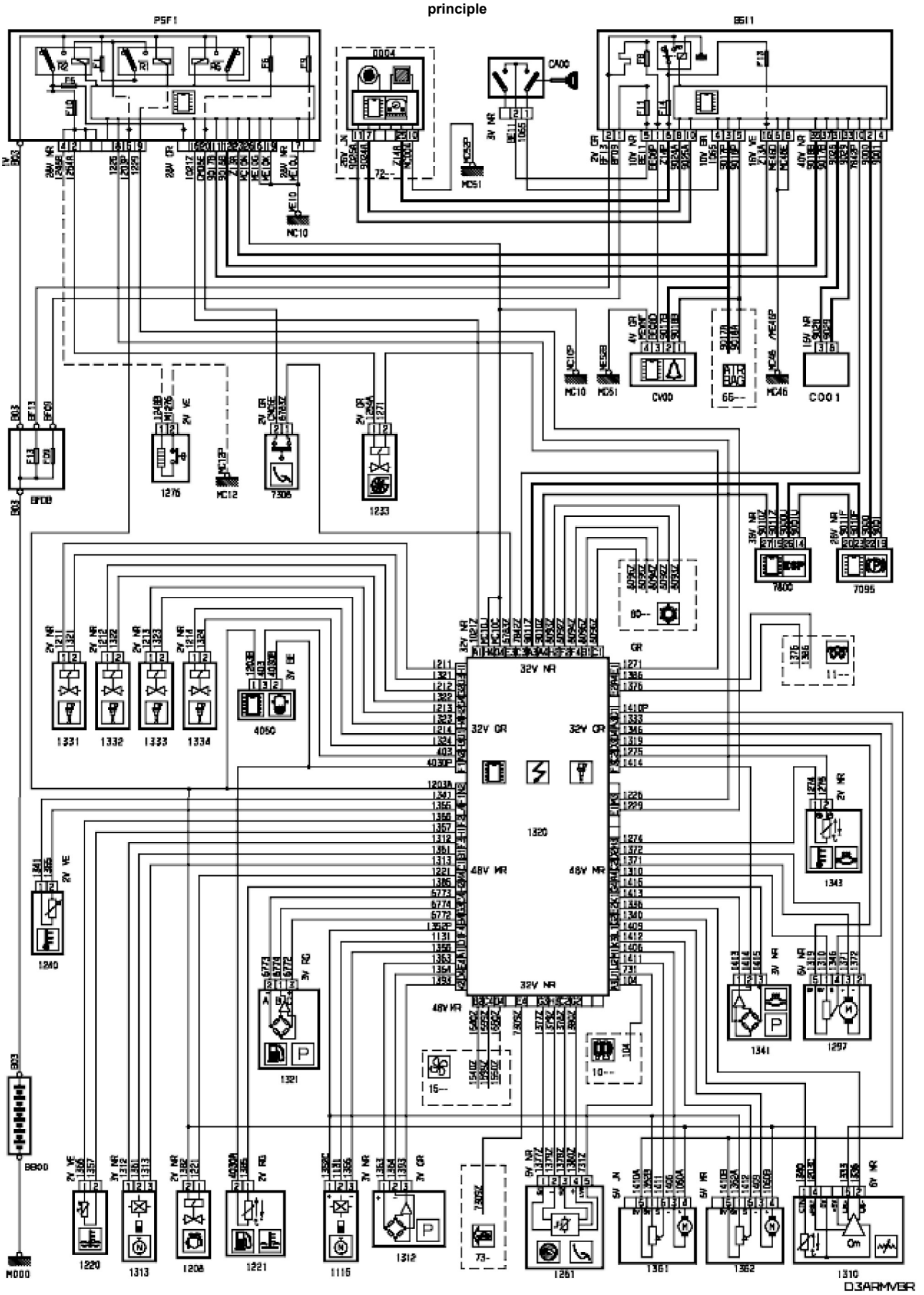

wiring

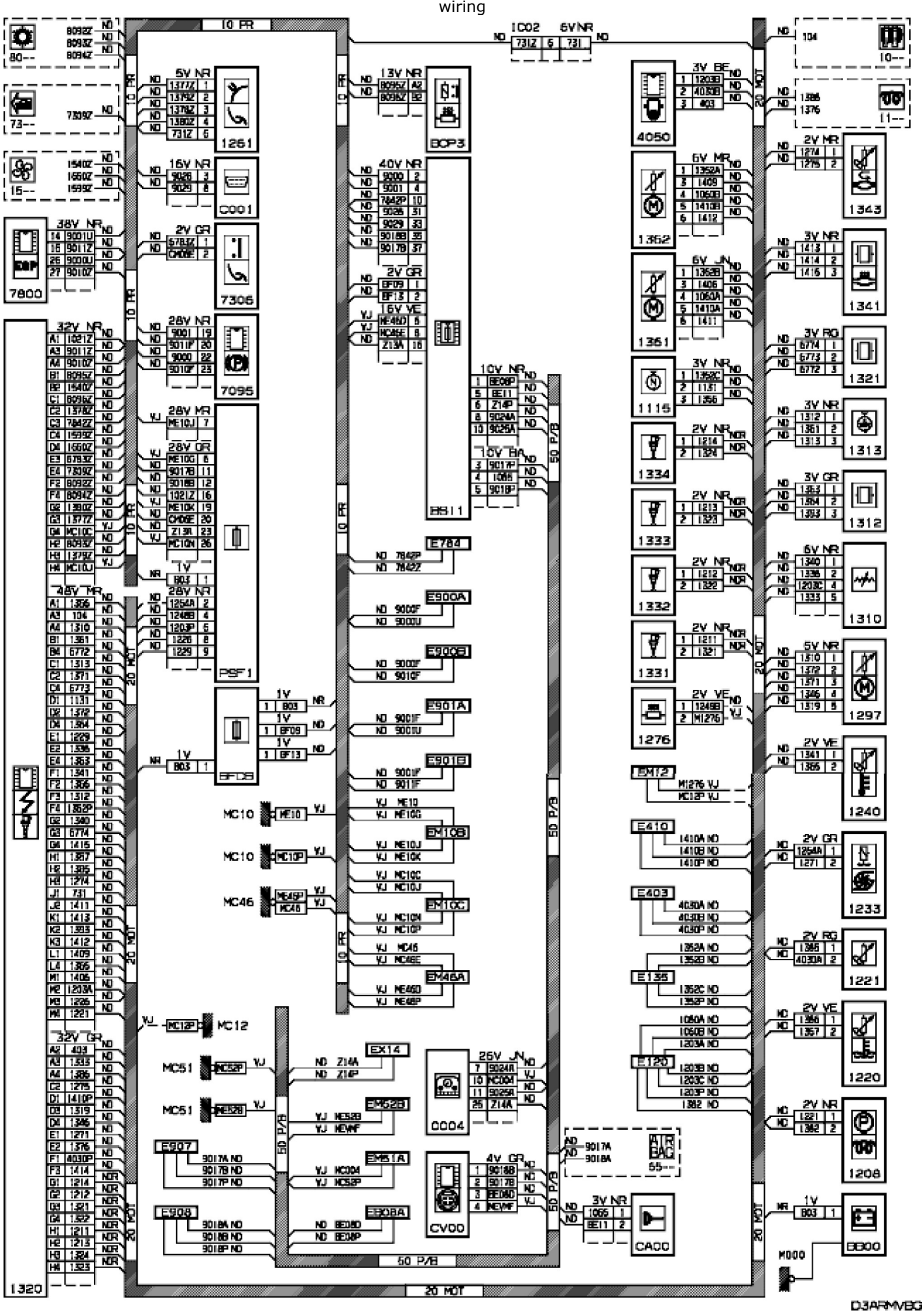
10 PR
20 MOT
50 P/B
1261
C001
7306
7095
PSF1
BFD8
7800
1320
BCP3
BB11
CV00
CA00
BB00
1343
1341
1321
1313
1312
1310
1297
1240
1233
1221
1220
1208
4050
1352
1361
1115
1334
1333
1332
1331
1276
E784
E900A
E900B
E901A
E901B
E410
E403
E135
E120
AIR BAG
D3ARMVBG

null

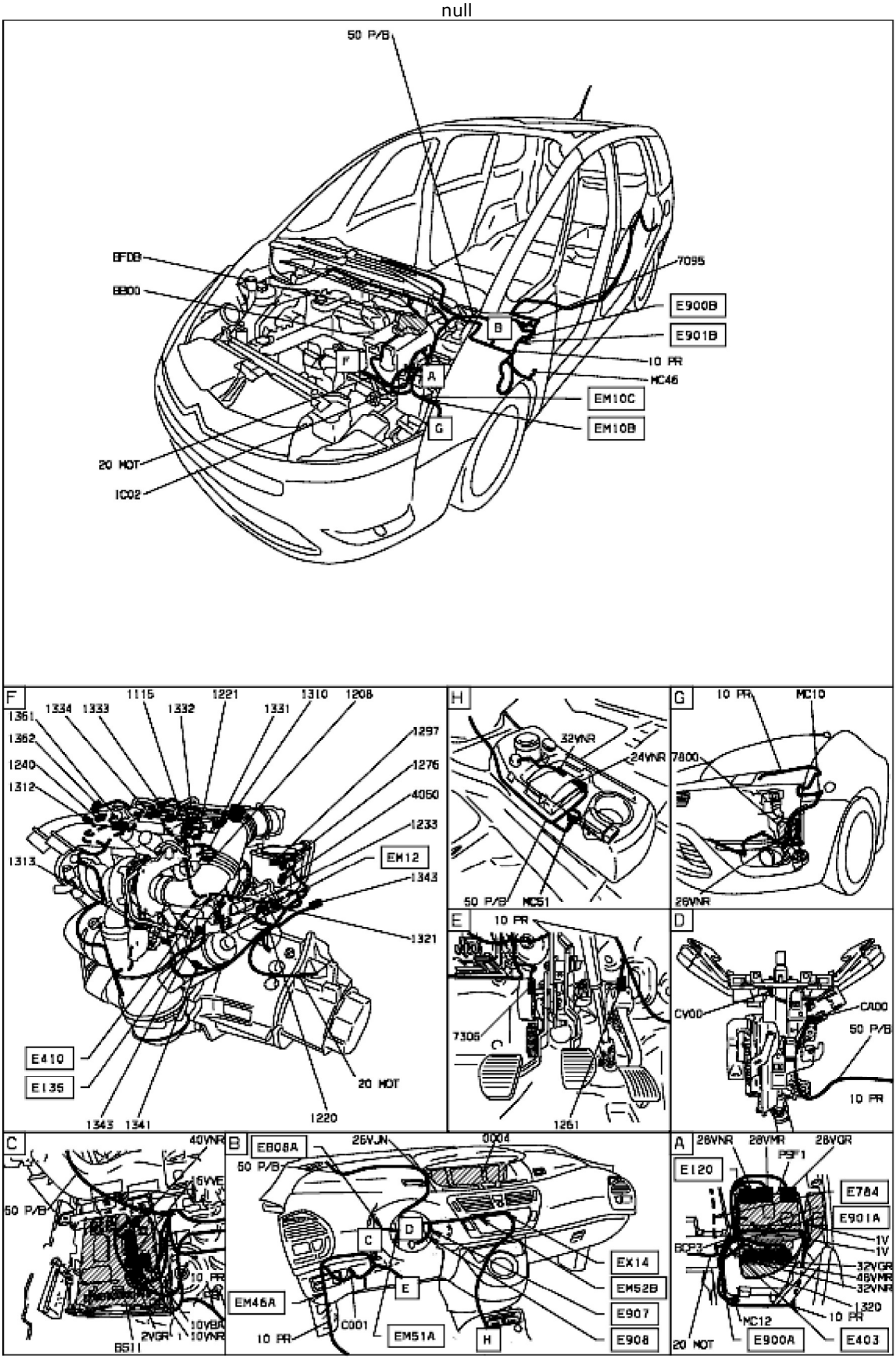

D3ARMVB1

property of PSA Peugeot Citroën