vehicle : C4		OPR : 11190	
domain	comfort and convenience	function	audio system
component			

principle

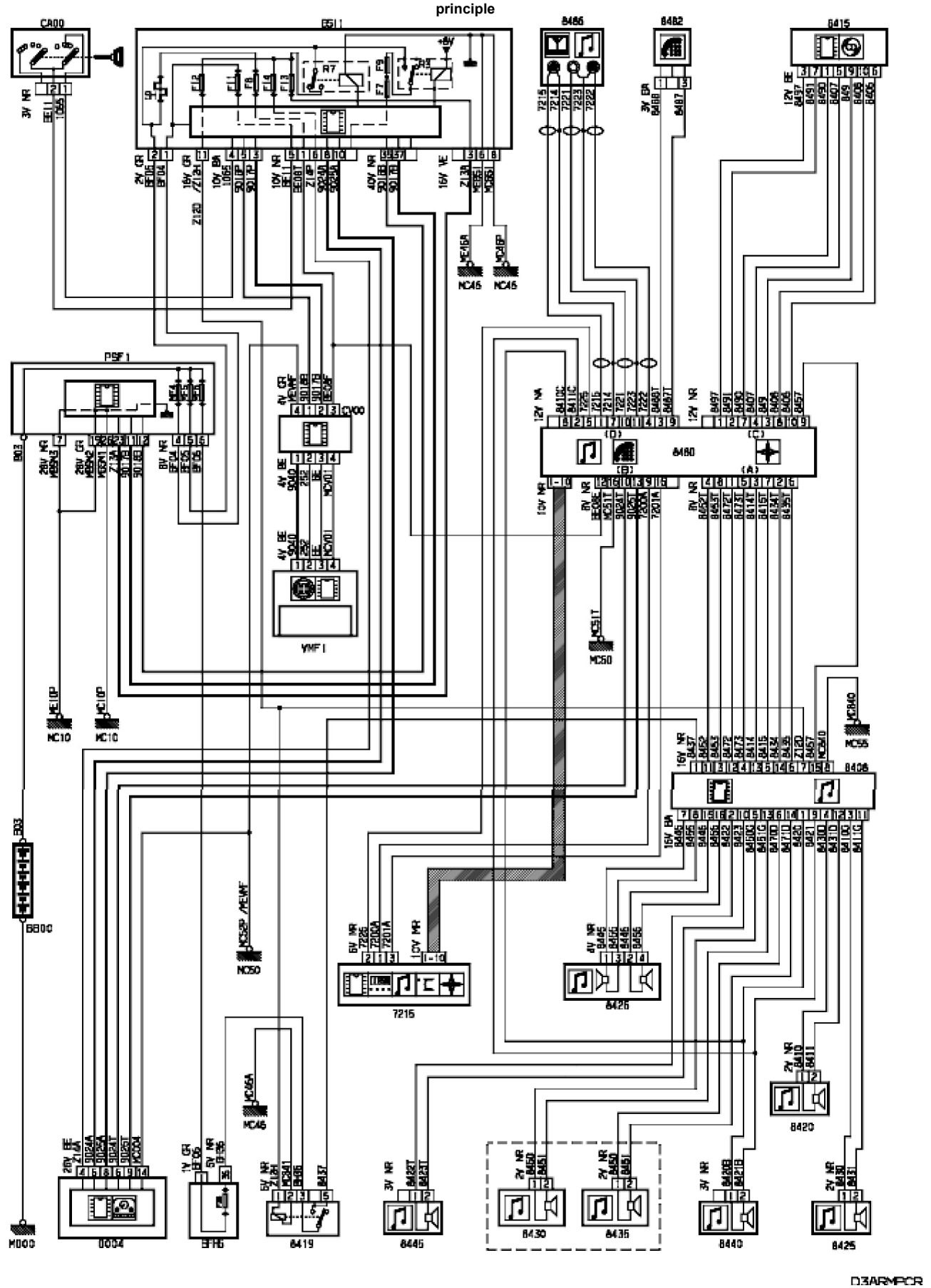

wiring

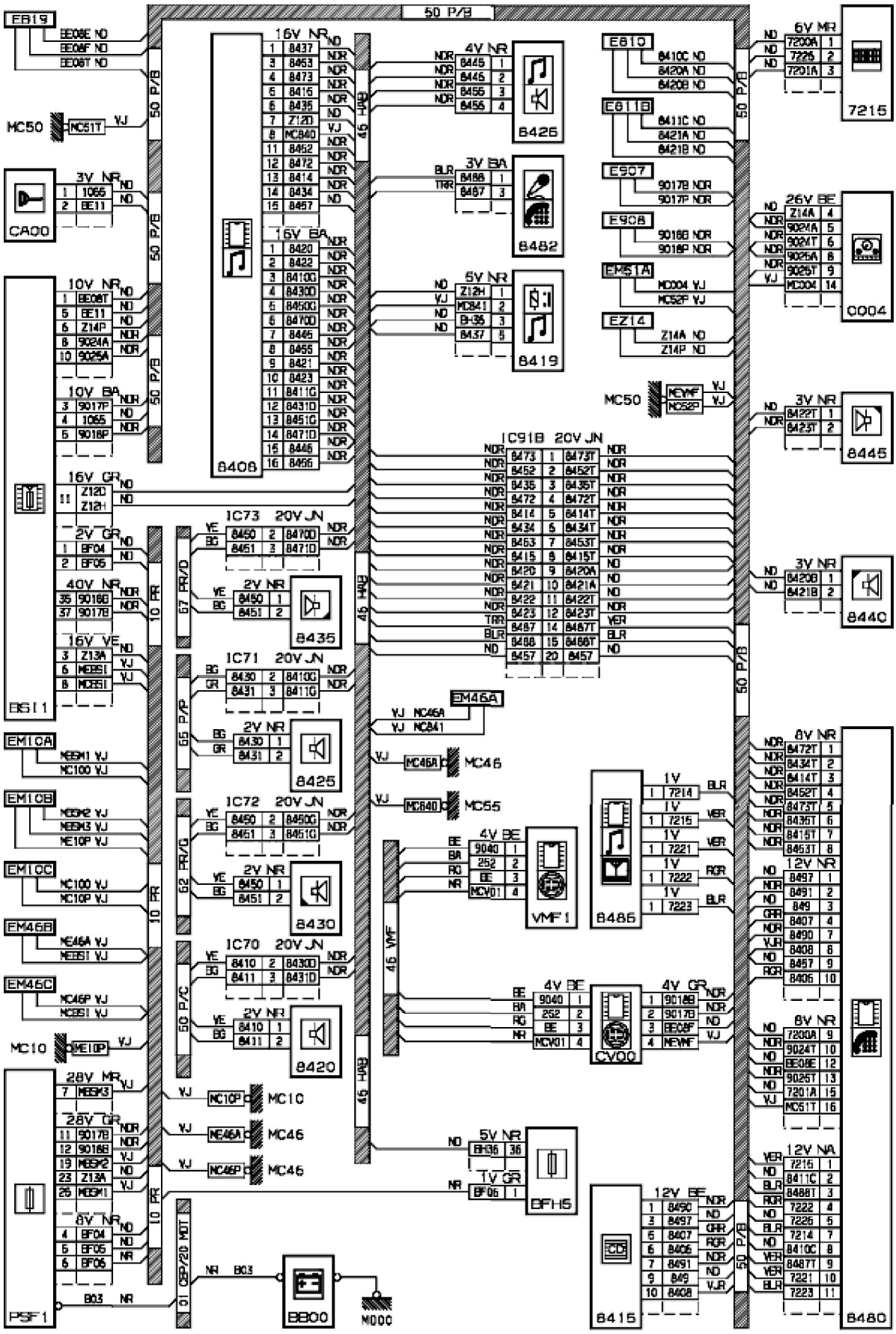
50 P/B
EB19
MC50
CA00
BS11
EM10A
EM10B
EM10C
EM46B
EM46C
MC10
PSF1
8408
8426
8482
8419
8435
8425
8430
8420
IC73 20V JN
IC71 20V JN
IC72 20V JN
IC70 20V JN
IC91B 20V JN
EM46A
MC46
MC55
VMF1
8486
CV00
BFH5
BB00
M000
8415
8445
8440
8480
7215
0004
D3ARMPCG

null

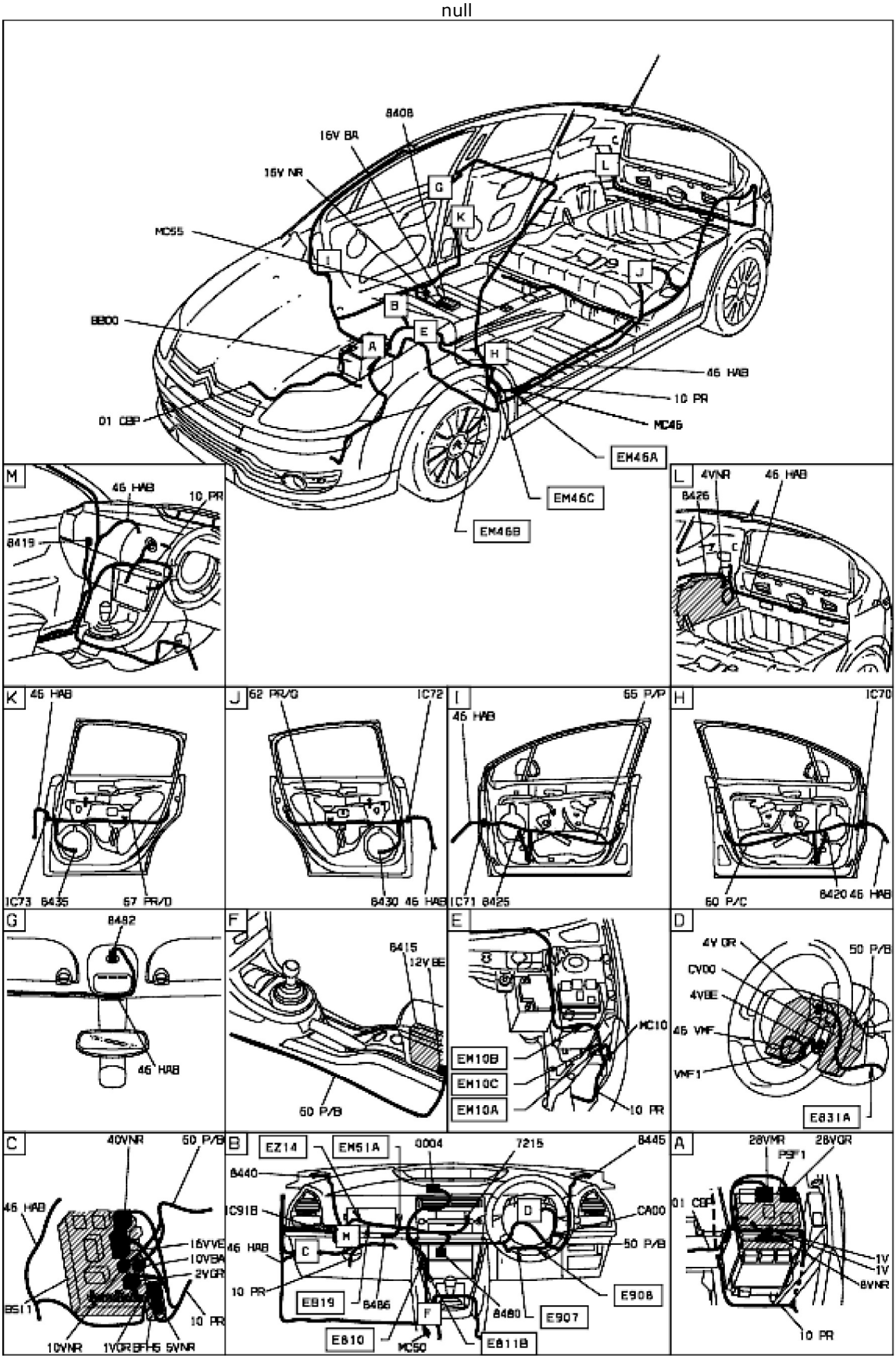

property of PSA Peugeot Citroën

12/03/2026